July 20, 1997 **Nehemiah 8 - 13**
1st - 6th Grades **3NEH44**
Rebuild the Walls

Nehemiah

Materials I Need:

Legend:
= **Option 1, Appropriate for 1st – 2nd Grade**
= **Option 2, Appropriate for 3rd – 6th Grade**

Memory Work:
So the wall was completed on the twenty-fifth of Elul, in fifty-two days. When all our enemies heard about this, all the surrounding nations were afraid and lost their self-confidence, because they realized that this work had been done with the help of our God. Nehemiah 6:15-16

Person	**Nehemiah**
People	**Jews Returning to Jerusalem**
Prophecy	**Rebuild and Reinstruct**
Principle	**With God all Things are Possible**

Aim Questions:
1. **How did the Jews respond when they heard God's Word preached to them?** ***(They listened for hours, confessed their sins, praised God.)***
2. **What were some of the promises the Jews made to God in the new covenant with Him?** ***(Not to marry anyone outside God's chosen people, keep the Sabbath law, tithe.)***
3. **What did Nehemiah find when he came back to Jerusalem a few years later later?** ***(The people had forgotten and broken all three promises, Tobiah was living in temple, no savings in the temple as there should have been.)***
4. **Why do you think the people sinned again after they made all these promises to God?** ***(Were distracted by world, lived by their own strength, weren't watchful and alert.)***
5. **What do we need to do so that we don't fall, too?** ***(Study Bible, allow Holy Spirit to work in us, remember our promises, be alert and watchful.)***

Hook:

Guilty/Not Guilty ***(Role-play).*** Begin class with the Miranda Rights as follows:
"You have the right to remain silent. Anything you say can and will be used against you in a court of law. You have the right to the presence of an attorney, and to have your attorney present during questioning. If you cannot afford an attorney, one will be appointed to you prior to any questioning if you so desire. Do you understand these rights? Do you wish to waive your rights and answer questions?"

In the United States today, we don't have to confess when we are guilty of wrongdoing. This "right" is part of the Fifth Amendment of the Constitution which says, " . . . nor shall (any person) be compelled in any criminal case to witness against himself . . ." That doesn't mean we can lie, but if we are guilty, we don't have to say anything.

But do we have the "right to remain silent" before God when we have done wrong? We are all guilty, and God wants us to confess our sin. What is involved when we do this? What happens when a person confesses a crime to members of law enforcement? What happens when we confess our sin to God?

❑ **Who's Who *(Discussion).*** What is your family known for? All girls, all boys, ten kids? Are you a singing family? Some families have all their first names starting with the same letter. Or do all of you have blonde hair, red hair or no hair at all. Nehemiah 8:1 says that when the people gathered, they read from the book of the Law of Moses which the Lord had given to Israel. Israel was known for being God's chosen people and for having the Law of Moses that they were to live by. What would you like to be known by?

❑ **Family Tree *(Project).*** Explain how lineage was important to the Jews *(Christ was in the Davidic line, land inheritance was divided up by families, certain families had special jobs such as the Levites, in Nehemiah each family lived on their own property and had specific jobs for rebuilding the walls).* Do you know who your ancestors were? Have the students complete this simple family tree. Other people besides blood relatives were considered part of households, like the servants. Do you have a special someone who you've adopted as a grandma or an aunt or uncle? What about our church family? Include them in your "family" tree, **3NEH44.GF1.**

❑ **Happy/Sad *(Discussion).*** Have students think of things that make them very happy and then things that make them very sad. Is there anything that can make them both happy and sad at the same time? There was something that made the Israelites so sad that they cried. But it also made them joyful. What do you think it was?

Book:

Presentation Ideas -

❑ **Feast of Tents *(Activity).*** Before the story, have the students arrange the tables in a row and sit underneath them like they were camping out. Have them listen to today's Bible Adventure to see what the Israelites did when Ezra read the Law.

❑ **Ezra Teaching the Law *(Overhead/Illustration).*** Ezra brought the Law before the assembly. Nehemiah 8, **3NEH44.GF2.**

❑ **Dedicating the Wall *(Overhead/Illustration).*** Israelites from all over came to Jerusalem to celebrate joyfully. Nehemiah 12, **3NEH44.GF3.**

Bible Adventure -

Did you enjoy last week's story about the rebuilding of the walls of Jerusalem under Nehemiah's direction? It was truly an amazing accomplishment. It was finished in 52 days and in such a way that the people, even God's enemies, saw His hand was responsible for it.

The beautiful city of Jerusalem once again had its wall around it, but because everything had been in ruins for so long, there were not many people living there. God put it in Nehemiah's heart to assemble all the Jews living in the area and to take a census, making a list of all the people.

After this was done, everyone gathered in Jerusalem and asked Ezra to bring out the book of God's Law and read it to them. As Ezra opened the book, all the people stood to show their respect for God's Word. Ezra read for five or six hours, and no one got bored or restless. The Levites, those men whose job it was to teach God's Law, made sure everyone understood what Ezra was reading. It may have been very much like the small groups that our church has, where people meet in homes to read God's Word with a leader there to help everyone understand what is being read. The people of Nehemiah's time did understand what Ezra was reading. God's Word has a way of going straight to the heart. As the people listened, their sin became so clear to them that they began to weep and mourn. Nehemiah encouraged them to give their attention to God and to join in the celebration of all He had done for them.

For eight days Ezra and the Levites read and taught God's Law to the people. They were like thirsty sponges, soaking it all up. The people had forgotten the Law and how to put it into practice. Now God's active, living Word was making changes in their lives.

About two weeks later, because they had listened to God's Word and because of the teaching they had received, they gathered together to confess their sin to God. For several hours they listened to the

reading of the Law. Then they spent several hours admitting their sin to God and worshipping Him. The Levites led them all in a prayer praising God for the way He had worked among His people in the past. They thanked God for creating all things, for choosing Abraham and making a covenant with him. They thanked Him for bringing them out of slavery in Egypt, and for giving the Law to Moses on Mt. Sinai. They thanked God for the miraculous way He led them and gave them food and drink as they wandered in the wilderness. The people prayed saying, "they became proud and stiff-necked, and did not obey *(God's)* commands." They thanked God that He remained faithful and did not abandon His people. He brought them to the land He had set aside for them. Still the people rebelled, even killing the prophets God had sent to them to warn them. Again and again they turned their backs on God, and God judged them. "In all that has happened to us, you have been just," the people prayed. "Because of our sins, the harvest of our lands goes to the kings who rule over us."

God's people were finally getting it. Sin costs us. When we try to ignore or openly disobey God, we pay. They decided to make a new covenant with God to show their changed hearts toward Him. The covenant contained these three main points. First, the people promised to not marry or tolerate marriage to anyone outside God's chosen people. Second, the people promised to keep the Sabbath Law, which included not buying or selling on the Sabbath. Third, the people promised to give a certain amount of money every year to support the temple and those who worked there. "We will not neglect the house of our God," they declared. Remember these three promises. We'll hear more about them a little later.

Now Nehemiah went about the business of making sure there were plenty of people living inside Jerusalem's walls. The people drew lots and one out of every ten families came to live in the city. The rest went back to their towns surrounding Jerusalem.

Not long after this, a very special celebration was planned to dedicate the rebuilding of the walls of Jerusalem. It was a very joyful dedication with lots of music and singing. Nehemiah appointed two large choirs to help with this. He had the leaders of Judah and these two choirs and other musicians go up on top of the walls. They went in opposite directions and met at the Sheeps Gate, near the temple. They must have made quite a sight and sound, marching along the top of the wall. It sure would have silenced the wisecracks of Sanballat and Tobiah, who had said the weight of a fox would knock those walls down! The people went into the temple and continued their celebration. The sound of people rejoicing could be heard far away. Nehemiah used this occasion to appoint men to be in charge of the temple storerooms. He organized the worship for the temple. He knew his time in Jerusalem was coming to an end. Nehemiah had promised King Artaxerxes he would return to serve him. He kept his promise and returned to the king. Nehemiah's heart was full as he thought of all the things God had done in Jerusalem.

A few years later, Nehemiah returned to Jerusalem. He was about to begin his second term as governor there. It didn't take long for him to see that things had not gone well while he was gone. Eliashib the priest had been put in charge of the temple storerooms. The rooms had in them no money, no temple items, no grain nor oil nor wine, nor anything else that was supposed to be there. But there was something there that should not have been!

Remember Tobiah, the enemy of God's people who did everything he could to stop the rebuilding of the walls? Eliashib had allowed him to move into the storerooms and live there! Nehemiah quickly moved him out, throwing Tobiah's things out into the street and having the rooms cleansed. Imagine allowing God's enemy to come and live in God's house!

Nehemiah next learned that the Levites, whom the people had promised to support, had gone to find other jobs because the people had not paid them. Nehemiah called them back and had all the people bring their promised tithes to the temple. He prayed that God would remember what was accomplished before and not punish them. But there was more for Nehemiah to see. People were busily working on the Sabbath, just as if it were any other day.

Nehemiah spoke to them sternly, saying he would punish them himself if they continued. What Nehemiah saw next really made him angry. Men of Judah had married women from other countries, something Ezra had worked hard to correct not too many years before. Nehemiah was angry because these men knew better. They knew that to marry a woman who did not honor God was forbidden. These women would lead them into idol worship again, something God would not put up with. Some of the men were so stubbornly wicked that Nehemiah pulled out parts of their beards to get their attention. Ouch!

Remember the promises the people had made to God just a few years ago? They were to keep the Sabbath holy and not do any work on that day. They were to give a certain amount of what they made for a living to the temple, and they were not to marry anyone outside of God's people. Here Nehemiah comes back a few short years later, and they've broken all three of those promises!

It might be easy for us to hear this story and think, "those Israelites were really dumb. Look at everything God did for them and they wouldn't even be faithful to Him." But we need to remember that from time to time our hearts are no different from those people. Were they sincere when they confessed their sin to God? I believe they were. When they made their covenant with God did they mean to carry through with it? I think they did. They took responsibility for their own sin, not trying to blame it on someone else or escape the fact that it was there. They took responsibility for making the changes needed to restore their relationship to their holy God. Then what happened to cause them to fail?

It's the same thing that can and does happen to us. We live in a sinful world with many distractions and opportunities to get involved in sin. We can start out the day with the best of intentions and fall flat on our spiritual noses. That's why Nehemiah wrote down the experiences of God's people--as a warning for us. On our own and living in our own strength, there is no way we can live the Christian life. We need God's Holy Spirit to give us that power. We need to keep studying God's Word so we can see that what God promises us is far greater that any happiness or pleasure that sin whispers we can have. We need to work at remembering the promises we make to God and to others. Nehemiah's message is clear. We must be alert and watchful in our spiritual lives because our spirits may be willing but our flesh is definitely weak.

Look:

❑ **Ezra's Scroll *(Craft).*** Ezra read God's Word to the people. Nehemiah 8:1-12. Make a tube torah to remind yourself of God's Holy Word.

You will need:

- Construction paper cut in half lengthwise *(2 strips per student)*
- White paper
- Crayons or markers
- Scissors

Directions:

1. Allow each student to decorate across the bottom and top of each piece of construction paper such as zigzags or decorative lines. Roll piece into tubes.
2. Glue three pieces of white paper together lengthwise; then use crayons or markers to write a short verse from Nehemiah *(this can be printed on the board for them to copy).* Decorate the passage along the edges.
3. Glue each side of the scroll strip to a tube.
4. Roll up the scroll around the tubes for storage; open it up to read like Ezra did.

Other Ideas:

1. Glue burlap around the tubes. Secure rolled up scroll with jute string.
2. Lightly wipe cooking oil over white paper after using crayons to "age" the paper.
3. Write the Ten Commandments.

❑ **Ezra Reads *(Role-play).*** Have one of the students or a teacher stand up on a chair like Ezra did and read each of the Ten Commandments from Exodus 20. After each commandment is read, have a different student volunteer explain it *(as Ezra's helpers did)* and give examples of how the Law would be obeyed in real-life situations *(a teacher might want to handle #4 and #7)*.

❑ **Responses *(Word Search).*** The Israelites had gone for a long time without learning anything from God's Law. Search for the words that describe their various reactions when they heard Ezra read from the Book of the Law. Write your own response at the bottom of the page, **3NEH44.GF4.**

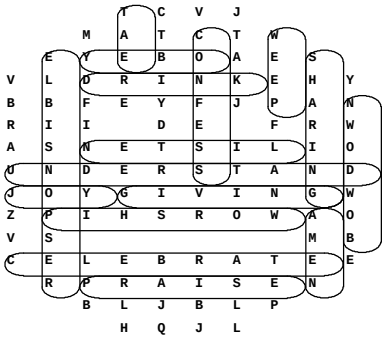

☐ **Open up the Gates, and What Do You See? *(Craft)*** Have students color and cut out the wall and gate on page one. Cut the doors away from the arch so that they can be folded to swing open. Have them color the temple on page two. Center the open gates over the temple. Paste the wall and arch to the background. The gates can be opened and closed. God's big project of rebuilding the temple and the wall was finally complete! Nehemiah 8:12 tells us that they celebrated with great joy when the words of the Lord had been made known to them through Ezra's reading of the Law. Have the students draw in people praising God, **3NEH44.GF5.**

☐ **Happy/Sad Masks *(Craft).*** Make a two-sided mask. Each student will need **3NEH44.GF6**, a craft stick, and some pieces of ribbon streamers. These should be ordered ahead of time. Cut out the happy mask and the sad mask. Glue the pieces of streamer across the back of one mask so that they protrude out of the sides. Then glue the stick so that about half of it protrudes out of the bottom. Glue the masks back to back, forming a two-sided mask with a craft stick handle. The Word of God made the people so sad they cried. Why? Then Nehemiah told the people they should be joyful and celebrate. Why?

☐ **Happy/Sad Prayer *(Action Play).*** Read part of all of Nehemiah's prayer in Nehemiah 9:5-37. As the prayer is read, have students show the happy or sad side of their mask at appropriate times *(or, if the mask craft is not chosen, have students respond with their own faces)*. After the reading, ask students what they heard during the sad parts of the prayer *(sin)*. What was Nehemiah saying in the happy sections *(what God has done)*?

☐ **Remember? *(Worksheet)*** Match the acts and events to the right people, **3NEH44.GF7.**

☐ **Wall March *(Illustration/Role-play).*** Using the map of the wall, trace the route that the two groups made in the dedication of the wall *(Nehemiah 12:31-43)*. Explain how the two groups of singers led by Ezra and Nehemiah worshipped with antiphonal singing. Divide students into two groups and move them to opposite sides of the classroom. Sing songs they know which fit a responsive style. Appoint an "Ezra" and a "Nehemiah" to lead each as they do the "Wall March" together. Participate with great joy that this huge work was completed! **3NEH44.GF8**

☐ **Who Did What? *(Worksheet)*** Get the facts straight for the review of Ezra and Nehemiah, cut and paste the correct description to the right of each person, **3NEH44.GF9.**

Took:

☐ **My Covenant *(Worksheet).*** The people made many promises that they put into writing and sealed. They did not wish to neglect the house of God again. What areas in our lives do we neglect? Putting a promise in writing doesn't mean we will never fail but it certainly is a serious reminder of what we have made a covenant to do. Write down your covenant with God. Put it somewhere that will remind you on a daily basis, **3NEH44.GF10.**

☐ **Remember Me with Favor, Oh God *(Discussion).*** In Nehemiah 13:14,22,31, Nehemiah asks God to remember the things that he had done so faithfully for the house of God and its services. What is it about you that would cause God to remember you with favor? Put what you believe in action,

James 2:14-17. Pray that our lives would be like Nehemiah's and Ezra's, hard-working servants of the Lord.

❑ **Secret Message *(Worksheet).*** Using the code, have the students find the secret message, **3NEH44.GF11.**

❑ **Revised Rights *(Discussion).*** Write the Miranda Rights on the board. If God were reading us our rights, what would He say? Rewrite the "Rights" so they are "spiritually correct." *(You have no rights. Anything you say had better be the truth because I already know you are guilty . . .)*

Our Family Tree

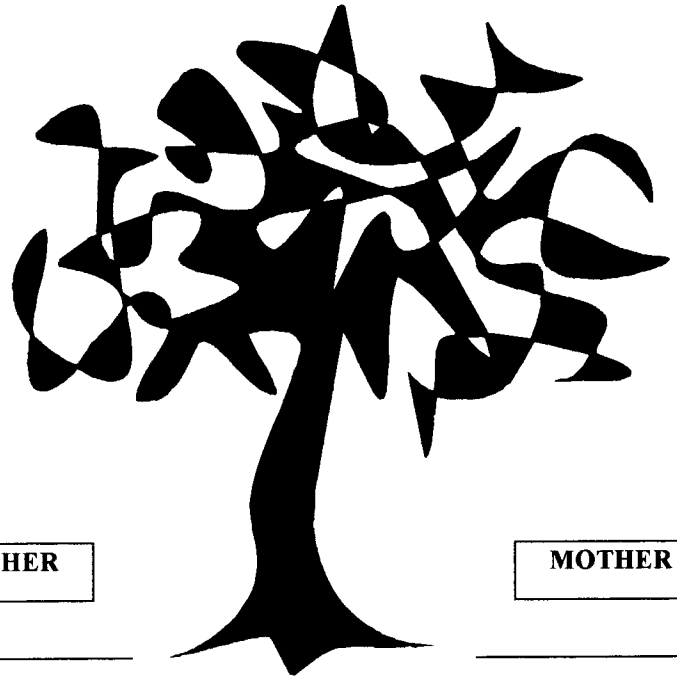

GRANDMOTHER

GRANDFATHER

GRANDMOTHER

GRANDFATHER

MOTHER

FATHER

CHILDREN

MOTHER

FATHER

GRANDMOTHER

GRANDFATHER

GRANDMOTHER

GRANDFATHER

HONORABLE MENTION

3NEH44.GF1

Ezra Teaching the Law

3NEH44.GF2

Dedicating the Wall

3NEH44.GF3

RESPONSES

FIND THE WORDS THAT SHOW HOW THE PEOPLE RESPONDED WHEN THE BOOK OF THE LAW WAS READ TO THEM!!

RESPONSES

			T	C	V	J			
		M	A	T	C	T	W		
	E	Y	E	B	O	A	E	S	
V	L	D	R	I	N	K	E	H	Y
B	B	F	E	Y	F	J	P	A	N
R	I	I		D	E		F	R	W
A	S	N	E	T	S	I	L	I	O
U	N	D	E	R	S	T	A	N	D
J	O	Y	G	I	V	I	N	G	W
Z	P	I	H	S	R	O	W	A	O
V	S							M	B
C	E	L	E	B	R	A	T	E	E
	R	P	R	A	I	S	E	N	
		B	L	J	B	L	P		
			H	Q	J	L			

AMEN
BOW DOWN
CELEBRATE
CONFESS
DRINK
EAT
GIVING
JOY
LISTEN
OBEY
PRAISE
SHARING
RESPONSIBLE
UNDERSTAND
WEEP
WORSHIP

HOW DO YOU RESPOND WHEN YOU READ OR HEAR GOD'S WORD?
HOW DOES GOD WANT YOU TO RESPOND?

OPEN UP THE GATES AND WHAT DO YOU SEE?

Color and cut out the wall and gate. Cut the doors away from the arch so that they can swing open. Color the temple on page 2. Center the open doors over the temple. Paste the wall and arch to the background. The gates can be opened and closed.

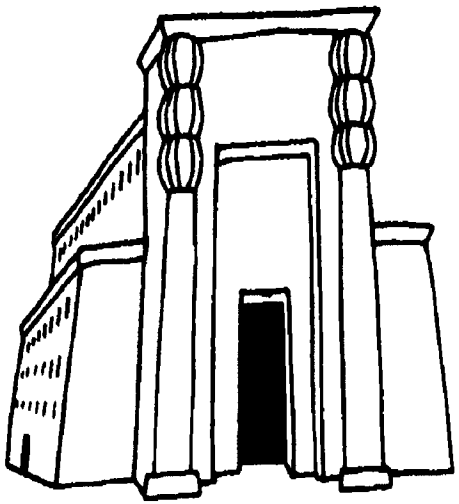

Happy/Sad Masks

3NEH44.GF6

REMEMBER?

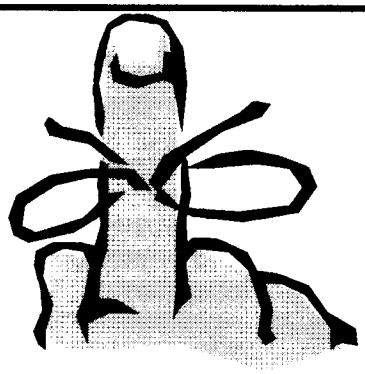

MATCH THE PEOPLE OR THINGS ON THE RIGHT TO THE DESCRIPTION OR EVENT ON THE LEFT.
(Use Nehemiah 9:7-38 if you get stuck.)

Abram	As numerous as the stars
Canaanites	Came from Ur of the Chaldeans
God	God gave him the Ten Commandments
Israelite Sons	God led Israelites with these
Manna	God sent this from heaven to feed the Israelites
Moses	God showed him signs and wonders in Egypt
Rock	God used to provide water
Israelite Fathers	Refused to listen, made calf idol
Pillar of cloud and of fire	Just and faithful
Pharaoh	Land and people captured

The Gates, Walls and Towers of Jerusalem

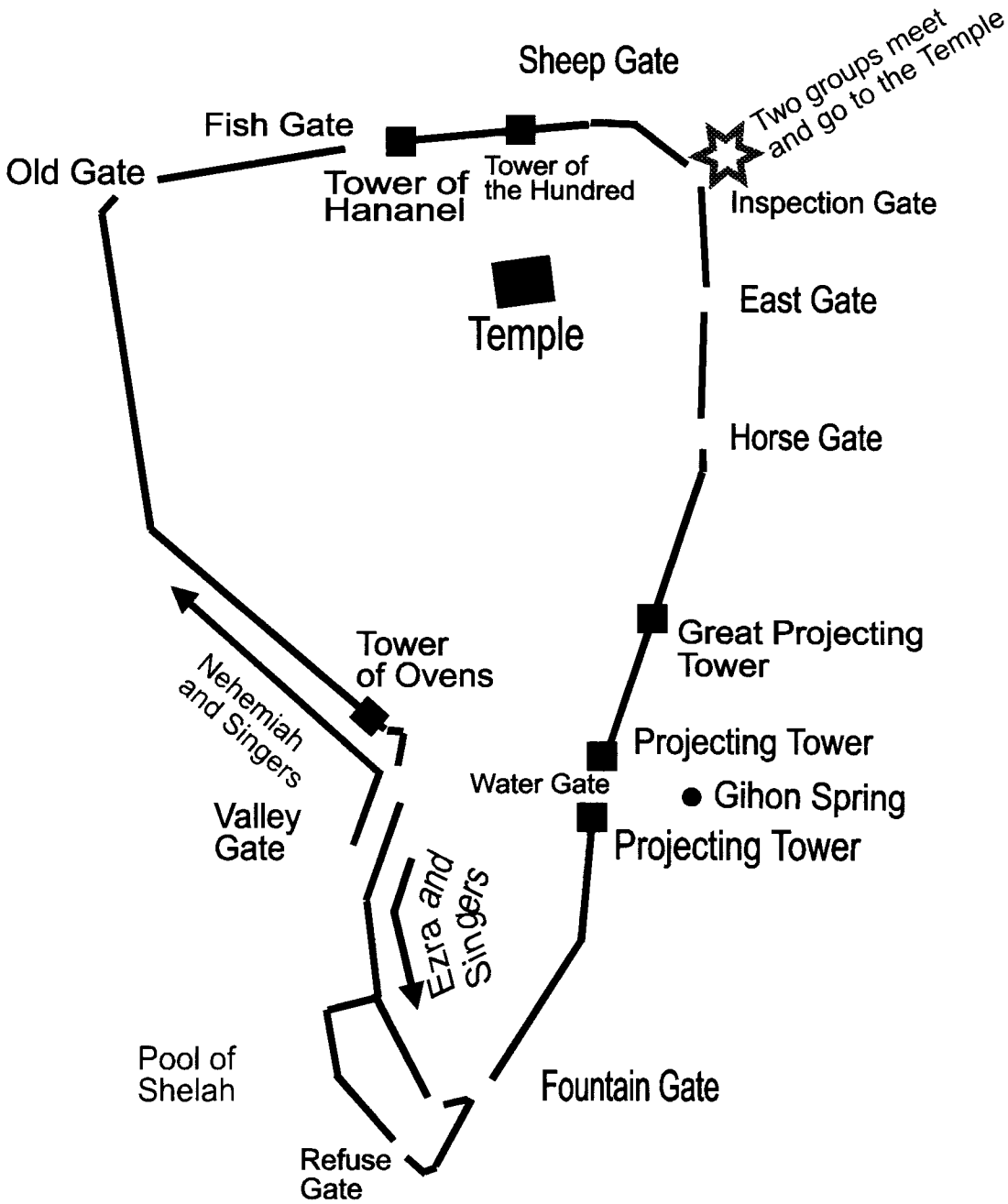

3NEH44.GF8

Who Did What?

Ezra

King Cyrus

Cut & paste the correct description on page 2 to the right of each person on this page.

Nehemiah

King Artaxerxes

He read the Book of the Law of Moses to the people when all the work temple and the wall was completed.

Went out at night to inspect the walls of the city.

Led the people in the rebuilding of the wall.

Tore his tunic and hair from his head and beard when he heard that the Israelite men had taken foreign wives.

Threw Tobiah's household goods out of the temple.

Nehemiah was his cupbearer.

Gave back to the Israelites the articles which Nebuchadnezzar had carried away from Jerusalem.

Ordered the rebuilding of the temple in Jerusalem.

Ordered the Israelites to appear before the leaders within 3 days or forfeit all their property.

Gave Nehemiah a letter to Asaph, keeper of the King's forest. This allowed Nehemiah to have timber for the gates & walls of Jerusalem.

Proclaimed a fast so that the people might humble themselfves before God. He then asked God for protection on their journey.

He read the Book of the Law of Moses to the people when all the work temple and the wall was completed. **(EZRA)**

Went out at night to inspect the walls of the city. **(NEHEMIAH)**

Led the people in the rebuilding of the wall. **(NEHEMIAH)**

Tore his tunic and hair from his head and beard when he heard that the Israelite men had taken foreign wives. **(EZRA)**

Threw Tobiah's household goods out of the temple. **(NEHEMIAH)**

Nehemiah was his cupbearer. **(KING ARTAXERXES)**

Gave back to the Israelites the articles which Nebuchadnezzar had carried away from Jerusalem. **(KING CYRUS)**

Ordered the rebuilding of the temple in Jerusalem. **(KING CYRUS)**

Ordered the Israelites to appear before the leaders within 3 days or forfeit all their property. **(EZRA)**

Gave Nehemiah a letter to Asaph, keeper of the King's forest. This allowed Nehemiah to have timber for the gates & walls of Jerusalem. **(KING ARTAXERXES)**

Proclaimed a fast so that the people might humble themselfves before God. He then asked God for protection on their journey. **(EZRA)**

My Covenant

3NEH44.GF10

My Covenant

3NEH44.GF10

SECRET CODE

=A	=B	=C	=D	=E	=F	=G	=H
=I	=J	=K	=L	=M	=N	=O	=P
=Q	=R	=S	=T	=U	=V	=W	=X
=Y	=Z						

=0	=1	=2	=3	=4	=5	=6	=7
=8	=9						

FIND THE SECRET MESSAGE

(Use the Secret Code above)